Application Report
SWRA467–September 2014

Developing a Low-Cost ZigBee® Enabled Smart Energy Meter On CC2538

Abhed Misra *WTBU-Low-Power Wireless*

ABSTRACT

This application note describes the implementation and integration of energy metering into a TI ZigBee Stack (Z-Stack™) using the CC2538 platform. The CC2538 is a SmartRF ZigBee system-on-chip solution from TI which offers a powerful ARM (Cortex-M3) core along with IEEE 802.15.4 ZigBee radio. This document discusses the implementation of single-phase metering which can be extended to three-phase metering also as the CC2538 offers more than a sufficient number of ADC channels required for the same. This design also uses the MSP430G2955, a value line family MCU, which drives the display and stores the metering data in EEPROM.

Contents

1 Introduction 2
2 System Requirements 2
  2.1 Hardware 2
  2.2 Software 2
3 Design Procedure 3
  3.1 Hardware Configuration 3
  3.2 Software Configuration 8
4 Application 13
5 Test Tools 15

List of Figures

1 Design Architecture 3
2 CC2538-Based Complete Meter 4
3 CC2538 ADC Frontend Current Channel 6
4 CC2538 ADC Frontend Voltage Channel 6
5 MSP430-Based LCD Display Board 7
6 IAR Workspace Look Up 9
7 OSAL Initialization Code Flow in ZigBee Stack 10
8 OSAL Initialization Metering Initialization Code Flow in ZigBee Stack 11
9 MSP430: Application Code Flow 13
10 CC2538: Application Code Flow 14
11 Ubiqua Sniffer Log: Network Association and Authentication by Meter 15
12 Ubiqua Sniffer Log: Metering Attributes Reporting by Meter 16

List of Tables

1 Hardware Tools and Functional Description 2
2 Software Tools and Functional Description 2

Copyright © 2014, Texas Instruments Incorporated

1 Introduction

Z-Stack™ is a ZigBee-certified stack from TI, available at the TI website, as a free download. It is running on the ZigBee system-on-chip (SOC) radio-CC2538. TI Z-Stack, with a combination of CC2538, is a ZigBee-certified and compliant platform by ZigBee Alliance, also listed on the ZigBee organization website.

In this document the hardware and software design for single-phase metering implementation and integration with Z-Stack is discussed in detail. The reader is expected to have a basic fundamental understanding of the ZigBee standard and the ZigBee network entities along with energy metering fundamentals. Examples use the CC2538-based (ZigBee SOC) LPRF module as ZigBee radio and metering controller along with the MSP430G2955 (value line MCU) as a display driver and metering data storage manager.

2 System Requirements

This section details the hardware and software system requirements.

2.1 Hardware

Table 1 lists the required hardware tools and their functional descriptions.

Table 1. Hardware Tools and Functional Description

Device	Tool	Function
CC2538 low-power RF module	CC2538EMK	This tool is flashed with TI Z-Stack. It takes care of the physical, MAC, and networking layer of the ZigBee network and energy metering.
MSP430G2955 value line MCU	MSP430G2955IPW28 on CC2538 display module, Rev 2	This MCU acts as a display driver for configuring and driving the LCD glass on the board. This MCU also stores the measured metering data into EEPROM.
CC2538 mother board	CC2538EVM Rev 2	This hardware platform has all the ADC frontend circuitry along with an RF EMK connector to mount the CC2538EMK. This board also has a simple, yet powerful, isolated SMPS on board based on the TPS28722, sourcing the entire circuitry from main power.
Sniffer tool	CC2531EMK	This tool is used along with the packet sniffer software tool to sniff and analyze the communication over the air between the radios.

2.2 Software

Table 2 contains the required software tools and their functional descriptions.

Table 2. Software Tools and Functional Description

Software	Role	Function
CC2538 low-power RF module	TI Z-Stack	The modified Z-Stack is flashed on to the CC2538 SOC.
MSP430G2955 value line MCU	Software LCD glass display driver and data storage in EEPROM	This software runs from the value line MCU and drivers and configures the LCD glass using GPIOs. The MCU communicates to CC2538 over UART using a defined command set. The MCU is also responsible for storing the measured metering data in to EEPROM interfaced over I^2C.
Compiler IDE (IAR or CCS)	Development environment	This IDE tool is used to develop, debug and compile the application code and Z-Stack code.
Sniffer tool (TI packet sniffer or Ubiqua)	PC tool for sniffing the over-the-air ZigBee packets	This tool is used to sniff and analyze the communication packets over the air between the radios.

Z-Stack is a trademark of Texas Instruments.
ZigBee is a registered trademark of ZigBee Alliance.
All other trademarks are the property of their respective owners.

Copyright © 2014, Texas Instruments Incorporated

3 Design Procedure

This section details the hardware and software configuration and discusses the meter main board and the LCD glass display.

3.1 Hardware Configuration

Figure 1 shows the overall architecture of the design.

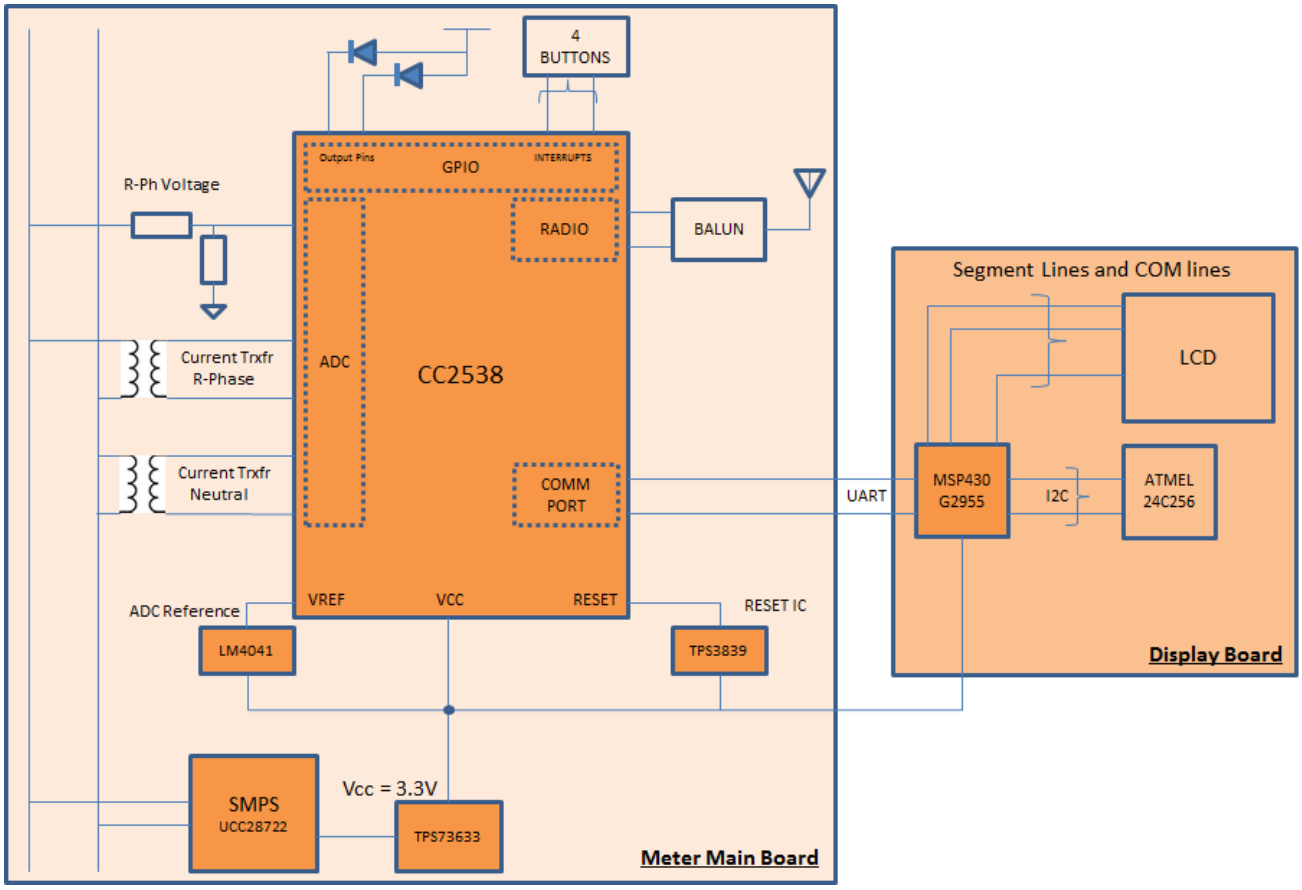

Figure 1. Design Architecture

There are 2 PCB boards in the design. One is the meter main board, the other being the LCD glass display board.

Copyright © 2014, Texas Instruments Incorporated

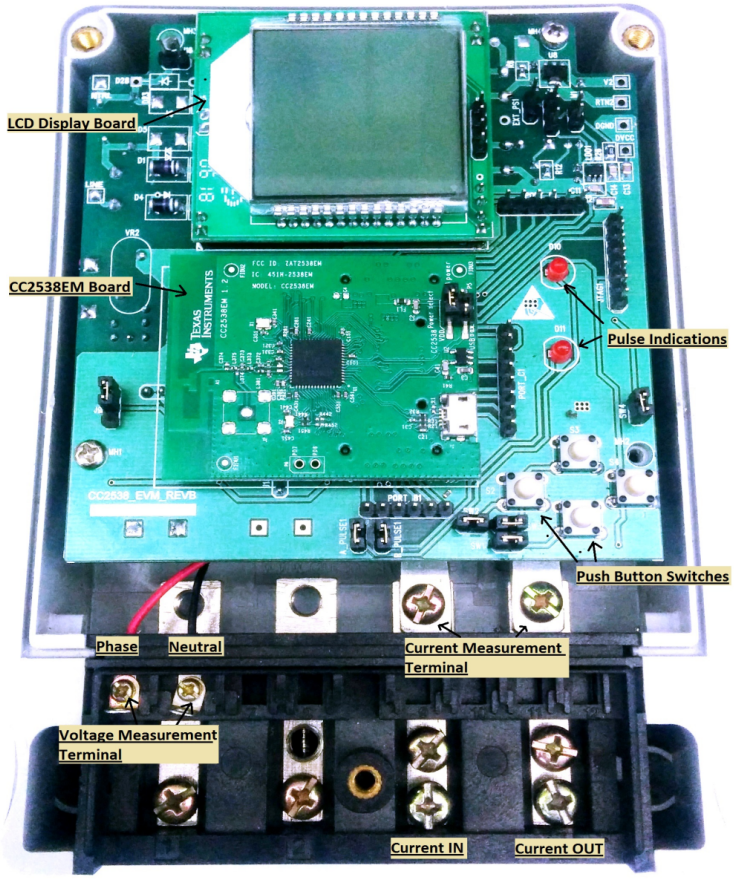

Figure 2. CC2538-Based Complete Meter

As shown in Figure 2, the meter main board features the following:

1. RF EMK connectors for mounting the CC2538EM module
2. ADC frontend
3. ADC voltage reference generator
4. Push buttons
5. UART communication port
6. Power supply

The LCD glass display board contains the following:

1. MSP430G2955 value line 28-pin MCU
2. LCD glass (Pie Electronics: part code 5951)
3. UART communication port
4. AT24C512 EEPROM (512KB)

3.1.1 Meter Main Board

The CC2538 is a system-on-chip solution for ZigBee which has integrated the powerful Cortex M3 core. There are many other peripherals integrated inside. The peripherals used in this design are:

1. 12-bit ADC with configurable resolution (3 channels used: total channels = 16)
2. UART communication ports (1 channel used: total channels = 2)
3. General purpose I/O pins (4 I/Os used: total I/Os = 32)

Copyright © 2014, Texas Instruments Incorporated

3.1.1.1 RF EMK Connectors

RF EMK connectors are included to mount the CC2538EM board. The pins of the connectors then subsequently connect to the respective interfaces. For a longer range, the CC2592 (a 2.4-GHz band power amplifier IC from TI) can be used. The CC2538 + CC2592EM board also fits on this RF EMK connector. These connectors allow the design to be neat and modular when debugging and developing.

3.1.1.2 ADC Frontend

To measure any analog signal, an analog-to-digital converter (ADC) is needed. Each ADC has a certain set of characteristics which define its usage for a specific measurement application. Some characteristics include the following:

1. Architecture (sigma-delta/SAR, and so forth)
2. Polarity (bipolar/unipolar)
3. Differential or single ended
4. Resolution (number of bits of output/ENOB)
5. Input full scale range (mV/V)
6. SINAD
7. Reference voltage (internal/external, ppm/Co, voltage)

In a typical energy meter, all the measurement is done through the supplied voltage and current signal. Since both the signals are AC in nature, a bipolar/differential ADC with a minimum resolution of 10 bits, good SINAD and reference voltage ppm, and internal PGA should work.

Conventional energy meters require a high dynamic range in voltage (140 V to 300 V) and current (200 mA to 120 A); therefore, the ADC characteristics become critical. For such applications, TI's MSP430 family, Sigma Delta ADC (SD_16 and SD_24) are the right fit.

For the lower dynamic range metering applications, a 12-bit ADC would also work.

The CC2538 is a 12-bit ADC with 16 single-ended and 8-differential channels. It is a unipolar ADC; therefore, it can only sample the positive signal levels (that is, more than the ground (0 V) level). To measure the full AC signal, level shifters are used to shift the signal to a certain voltage also act as the reference voltage for the ADC. The schematic in Figure 3 and Figure 4 show how the voltage and current signal are connected to the CC2538 ADC channels, ensuring the full input scale range utilization. As evident in the schematic, the input signal of voltage and current is first fed to a SHUNT/BURDEN resistance (R21 and R44 in the current channel and R15 in the voltage channel) and the drop (mV) across that resistance is then level shifted using a single-level op-amp (LM321).

Copyright © 2014, Texas Instruments Incorporated

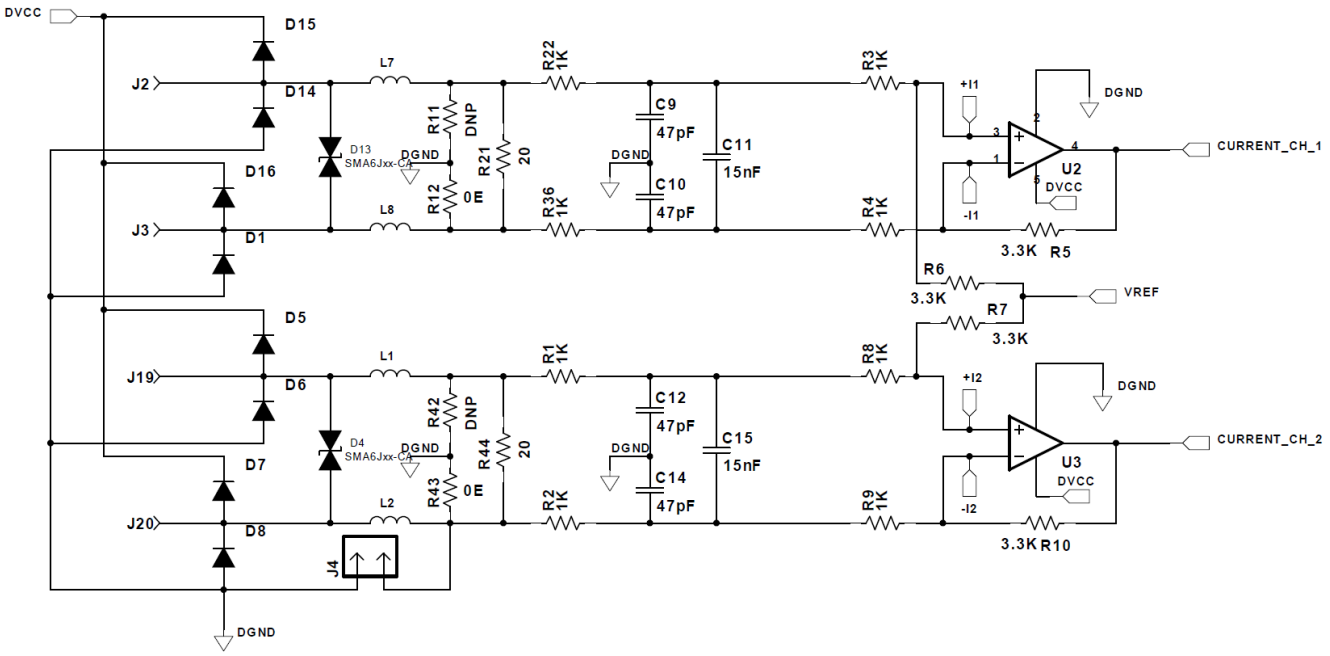

Figure 3. CC2538 ADC Frontend Current Channel

In this case, the shunt values are selected for the following dynamic range:

1. Voltage: 180 V to 290 V
2. Current: 200 mA to 30 A

The value of shunts comes to 3 k for voltage and 20 Ω for current, considering a 1:2500 turns CT ratio, also shown in the figures.

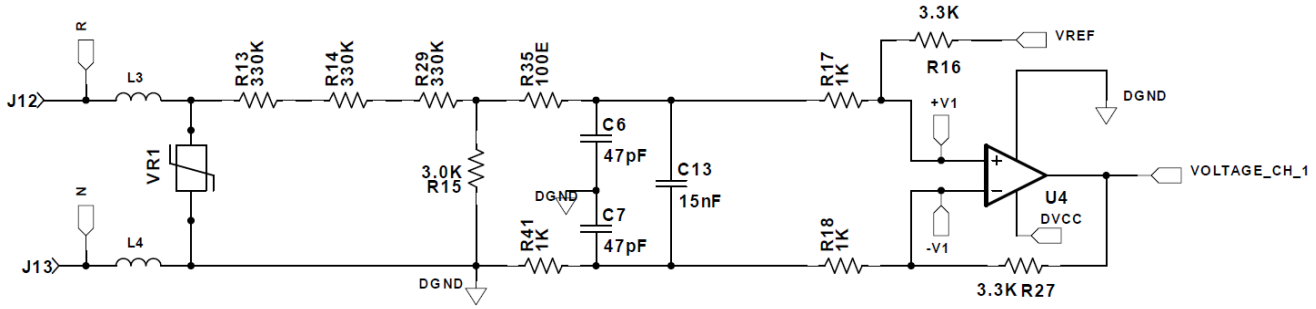

Figure 4. CC2538 ADC Frontend Voltage Channel

3.1.1.3 ADC Voltage Reference Generator

The LM321 shifts the input signal from the shunt to the VREF voltage fed from the LM4041 voltage reference generator. The LM4041 is an extremely stable external voltage reference and is also connected to the CC2538 pin number 23 (PA7) by shorting the jumper (VREF) on the board. The voltage reference is 1.23 V, the ADC full scale range comes to 2.5 V. This full-scale range defines the selection of the shunt value as the minimum signal to be measured should also be detected and visible to ADC. Separate voltage reference generators are used to eliminate the cross channel overloading leading to the reflection of one signal into other channels. The user is free to optimize the ADC front end connections using a different approach.

Copyright © 2014, Texas Instruments Incorporated

3.1.1.4 Push Buttons

Four buttons are connected to the CC2538, allowing different functional associations to each one, depending on the end-use case. Each button has a jumper to enable and disable it, as needed.

The switches are used for the following functions:

1. Switch-1: port B pin 2 (PB2) – display parameter scroll-up
2. Switch-2: port B pin 3 (PB3) – display parameter scroll-down
3. Switch-3: port B pin 4 (PB4) – self calibration of the meter
4. Switch-4: port A Pin 6 (PA6) – future use

3.1.1.5 UART Communication Port

From the communication capability perspective, the CC2538 has 2-UART's, 2-SPI, and 1-I^2C port in it. One UART port communicates with the LCD display board. Jumper LCD_MP connects the LCD display board to CC2538's UART-RXD and UART-TXD along with the supply (Vcc) and ground pin. The UART peripheral is mapped to port D, pin 0 and 1, with PD0 being the RXD and PD1 being the TXD pins, respectively.

3.1.1.6 Power Supply

The power supply on the main board is an isolated SMPS based on UCC28722, which is a low-cost CVCC flyback controller with primary-side regulation for bipolar power. The UCC28722 provides an isolated-output constant-voltage (CV) and constant-current (CC) output regulation without the use of an optical coupler. The device processes information from the primary power switch and an auxiliary flyback winding for precise control of output voltage and current. This SMPS can easily source 200-mA constant current at 5 V. It powers both the boards through the TPS73633 – a low dropout regulator with a very low quiescent current (0.4 mA) and a very low RMS noise voltage.

3.1.2 LCD Glass Display Board

In general, all the energy meters have a display in them. The display may be an LCD glass or a 7-segment LED display, or even a graphical dot-matrix display. The integrated LCD driver in the metering SOC chip is a definite advantage and is now commonly used. The CC2538 is not a metering SOC, but it has a huge amount of processing power and integrated peripherals, which can be used to implement applications like energy metering, as done in this case. But the CC2538 doesn't have an integrated LCD driver; therefore, an external LCD driver is needed to drive the LCD glass. This design uses the MSP430 value line MCU as the LCD glass driver. This provides the great advantage of having a scalable, general-purpose, feature-intensive LCD module.

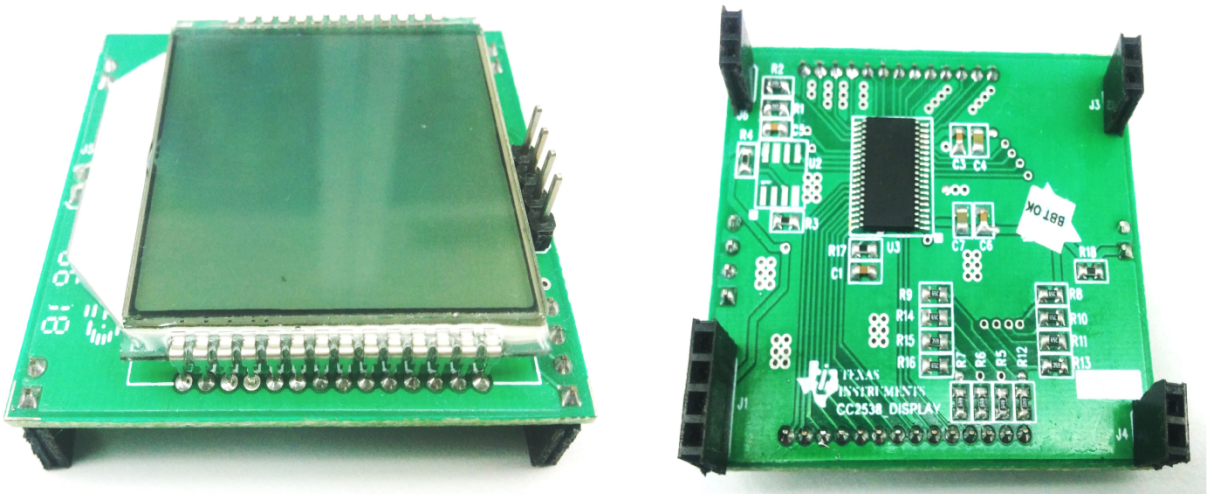

Figure 5. MSP430-Based LCD Display Board

Copyright © 2014, Texas Instruments Incorporated

3.1.2.1 MSP430G2955 Value Line 28-Pin MCU

The MSP430G2955 is used to drive the LCD glass. This MCU communicates with CC2538 to query the data and then display it on the LCD glass. MSP430 also manages the data locally by storing it in external memory. At power up, the MCU reads the data from EEPROM and displays it on the LCD glass until it gets the updated values from CC2538. As soon as the updated values are received by the CC2538 they are updated on display and memory.

3.1.2.2 LCD Glass (PIE Electronics: Part Code 5951)

The LCD glass used in this design has been exclusively developed by Pie Electronics. This glass has 27 pins, hence it needs an MCU with a minimum of 27 GPIO's. With 4 COM lines and 23 segment lines the glass has 92 segments to display lot of information.

3.1.2.3 UART Communication Port

The meter main board MCU (CC2538) communicates with the LCD Display board on UART. The UART baud rate is 9600. The command protocol being used is a proprietary protocol mentioned in Appendix A of this document.

3.1.2.4 AT24C512 EEPROM (512KB)

This board has a 512KB EEPROM interfaced to the MSP430 on I^2C. All the queried data from the metering MCU (CC2538) is stored and maintained in this EEPROM by MSP430. There is more than sufficient memory capacity to store the entire data of a single-phase meter including the energy consumption, billing, load survey, tamper log data, and TOD too.

3.2 Software Configuration

Software development is as complex as hardware development. The main components of the hardware on both the boards are as mentioned below:

Meter Main Board:

1. ZigBee network communication
2. Metering
3. UART communication
4. GPIO interrupts

LCD Glass display board has:

1. LCD glass driver
2. UART communication
3. EEPROM interface

Copyright © 2014, Texas Instruments Incorporated

3.2.1 Meter Main Board

The meter main board software runs on the CC2538. The foundation software used is TI's ZigBee Stack (Z-Stack), version 2.6.0. TI Z-Stack is free to download from the TI website. After downloading and installing the Z-Stack part-wise folders are found having respective sets of examples which are very comprehensive and give a great head start for end-application development.

The TI Z-Stack is based on operating system abstraction layer (OSAL). Before reading this document TI recommends reading the OSAL API and ZigBee developer's guide for clear understanding of the code written and integrated with Z-Stack.

This design uses the example workspace/project of SE profile with simple metering-router as a project. This project is found at the following location inside the installed Z-Stack folder.

C:\Texas Instruments\Z-Stack Energy 1.1.0\Projects\Z-Stack\SE\SampleApp\CC2538

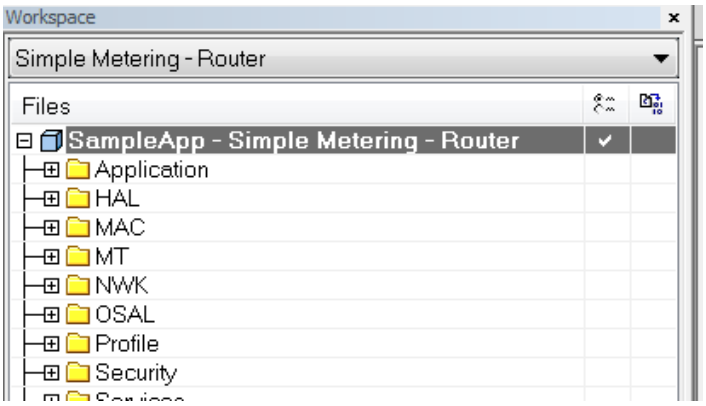

Figure 6. IAR Workspace Look Up

In the simple metering router project, there are different code file folders for respective layers of the ZigBee stack.

3.2.1.1 ZigBee Network Communication

The Z-Stack running on the CC2538 takes care of the ZigBee networking. In the simple metering-router example, the CC2538 is configured in the simple meter role as per the smart energy profile. In OSAL, each task needs to be initialized and assigned a unique taskID. Each task is then initialized with unique events with the unique bit location. When an event occurs, it is easily identified by the respective event flag. An event can occur due to interrupt or may also be triggered by some other layer of stack or may be periodic poll. As a part of the initialization in the **simplemeter_init** function, the Z-Stack is configured with all the related parameters. Then the unique taskID of simple metering router (**simpleMeterTaskID**) is registered with the OSAL. Figure 7 shows the tree flow of the function.

Copyright © 2014, Texas Instruments Incorporated

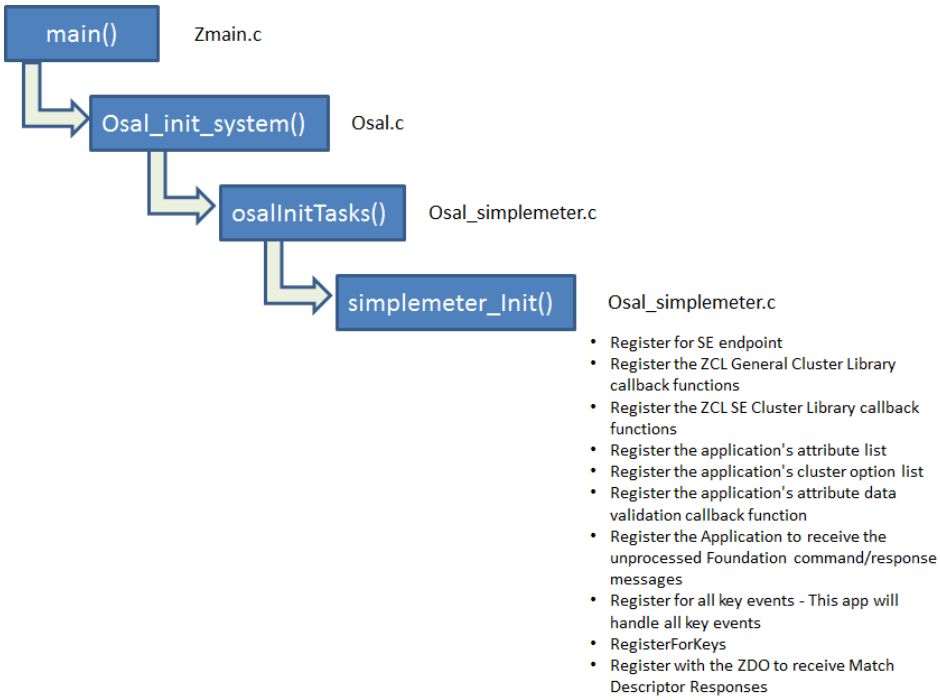

Figure 7. OSAL Initialization Code Flow in ZigBee Stack

The events registered with **simpleMeterTaskID** are:

1. SIMPLEMETER_IDENTIFY_TIMEOUT_EVT (0x0001)
2. SIMPLEMETER_UPDATE_TIME_EVT (0x0002)
3. SIMPLEMETER_KEY_ESTABLISHMENT_REQUEST_EVT (0x0004)
4. SIMPLEMETER_REPORT_ATTRIBUTE_EVT (0x0008)
5. SIMPLEMETER_CONNECTED_EVT (0x0010)

For the periodic trigger of the OSAL event for a specific task, initiate an OSAL timer with the defined time interval. For example, the **osal_start_timerEx()** function initializes an OSAL timer for **SIMPLEMETER_UPDATE_TIME_EVT** in **simpleMeterTaskID** for the time duration of **SIMPLEMETER_UPDATE_TIME_PERIOD**, which is 1 second. So this event is triggered after each 1 second in the respective taskID. Similarly for other taskIDs, the respective events can be defined and initiated. One important thing to keep in mind is that the lower the taskID, the higher the priority it has in OSAL. Hence, if a new task is initialized then it should ensure proper priority of the taskID depending on its use. The OSAL event can also be initiated by using the function **osal_set_event()**, passing the respective taskID and event ID. These events for the respective taskID are serviced in the respective **event_loop()** functions. The respective event loop functions are initialized and defined as shown in Figure 8.

Event loop functions can be used where the conditional qualification of the event is needed. The correct initialization of the taskID and registering of respective ZigBee parameters is critical for the ZigBee networking as per the desired profile and role for registered data clusters.

3.2.1.2 Metering

When implementing the metering, the ADC peripheral needs to be initialized first, and correctly. The CC2538 ADC supports up to 12-bit resolution. For this design, ADC channel 0(AIN0), 2(AIN2), and 4(AIN4) are used in the single-ended configuration. The level-shifted voltage and current signal are sampled by the ADC channels and then on the samples of the respective channel, the metering parameters are calculated. Figure 8 illustrates the code flow.

Copyright © 2014, Texas Instruments Incorporated

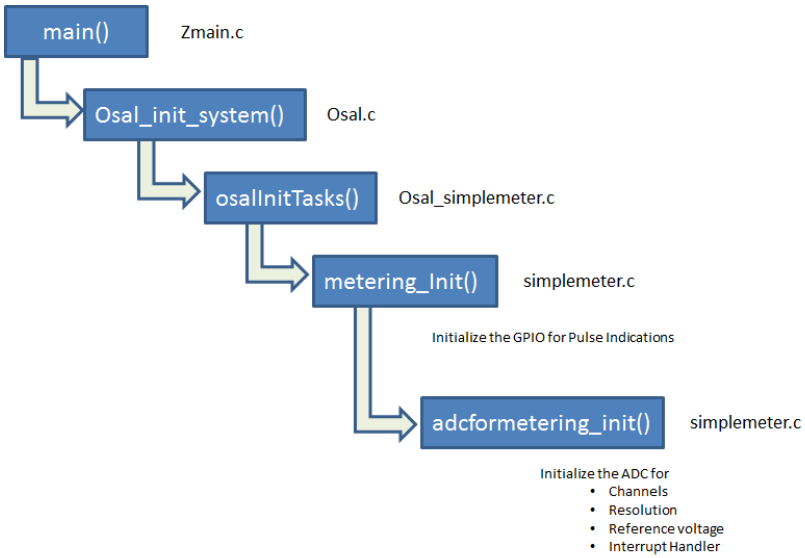

Figure 8. OSAL Initialization Metering Initialization Code Flow in ZigBee Stack

After initializing the ADC peripheral, the metering taskID is created by **MeteringTaskID**. All the metering-related work is done through this taskID. The unique events initialized for this taskID are:

1. METERING_MEASUREMENT_EVT (0x0001)
2. METERING_PARAMETERS_UPDATE_EVT (0x0002)
3. METERING_MEM_UPDATE_EVT (0x0004)

The **METERING_MEM_UPDATE_EVT** is registered with an OSAL timer of 1 second, to periodically trigger. On successfully initializing the ADC, The ADC interrupt is registered with the interrupt handler (**adcinthandler**), which is called on completion of a single sampling cycle. In **adcinthandler()**, the channel switching is done and the sampled values are stored in the respective channel sample accumulation register for RMS value calculation. In the serial sequential manner, the channel sampling is done in each channel from AIN0, AIN2 and AIN4. Each channel is sampled for 2048 samples and then **METERING_MEASUREMENT_EVT** is triggered using the **osal_set_event()** function.

3.2.1.3 UART Communication

The CC2538 does not have an integrated LCD driver and hence cannot drive an LCD glass. The MSP430 drving the LCD glass in this design is sent the measured data to be displayed on UART by the CC2538. The CC2538 sends the measured data in the packet with a unique ID for each parameter to MSP430. The CC2538 also alerts the switch press event for parameter scroll through the unique ID data packet. This command response is proprietary (see Appendix A), and can be easily expanded for adding more parameters to be displayed on the LCD display. The function for initializing the UART on CC2538 is by name; **displayuart_init()**. The interrupt handler for UART is by name; **UART0IntHandler()**. The UART is configured for:

1. Baud Rate: 9600
2. Hardware control: None
3. Parity bit: 1
4. Data bits: 7

Copyright © 2014, Texas Instruments Incorporated

3.2.1.4 GPIO Interrupts

The GPIO in CC2538 can be configured as an interrupt source for any specific functionality or event indication. Four switches are used for different use-configuration. Switch 1 is used for display scroll event, the other 3 switches are for user-defined purposes. These interrupt events are checked and serviced in the **Hal_ProcessEvent()** function.

3.2.2 LCD Glass Display Board

The display board uses an on-board MSP430G2955 to drive the LCD glass and manage the data storage on EEPROM. This MSP430 has 38 pins with a lot of peripherals integrated inside. The UART and I^2C communication peripheral is used along with GPIOs. This MSP430 drives a 27-pin LCD glass and 512KB EEPROM from ATMEL for storing the measured data by CC2538 periodically sent over UART.

3.2.2.1 LCD Glass Driver

The 27-pin LCD glass is a 4-mux LCD glass with 92 segment support. The 4-COM lines of LCD glass are connected to GPIO and are periodically configured as output and input for driving the related/corresponding segment on the glass. The display parameter is updated periodically, after 5 seconds. The timer inside the MSP430 has been configured for a 1-ms interval and is used to generate the desired waveform and keep the time schedule. For details on pin connection, signal waveform, and code for driving the glass, please refer to *Software Glass LCD Driver Based on MSP430 MCU* (SLAA516A).

3.2.2.2 UART Communication

The MSP430 has 2 USCI machines which can be configured into UART/SPI/I^2C. In this design, the USCI_A is configured for UART. To simplify the display board layout, software I^2C for EEPROM using GPIOs is implemented. Use the USCI_B for I^2C interface for EEPROM communication and control. The data received over UART, as per the predefined communication protocol in Appendix A, is displayed after filtering the data payload for the corresponding unique ID. The configuration of UART port is as follows:

1. Baud Rate: 9600
2. Hardware Control : None
3. Parity bit: 1
4. Data bits: 7

3.2.2.3 EEPROM Interface

The EPPROM on this board is interfaced in GPIOs and is communicated using software I^2C. MSP430 periodically stores the data on EEPROM as when updated and received by CC2538 over UART. In existing code, only basic parameters (voltage, current, and active energy) are implemented, this can be expanded for all the power, energy, and metering parameters, including the billing and load survey data. The size of the EEPROM used in the design is 512KB which is more than sufficient to store the 60 days of load survey and tamper data. Due to the lack of GPIO, the control of the write protect pin on MSP430 has not been implemented; therefore, the WP pin of EEPROM is latched to the supply pin.

Copyright © 2014, Texas Instruments Incorporated

4 Application

Figure 9 and Figure 10 illustrate the application code flow for the MSP430 and CC2538.

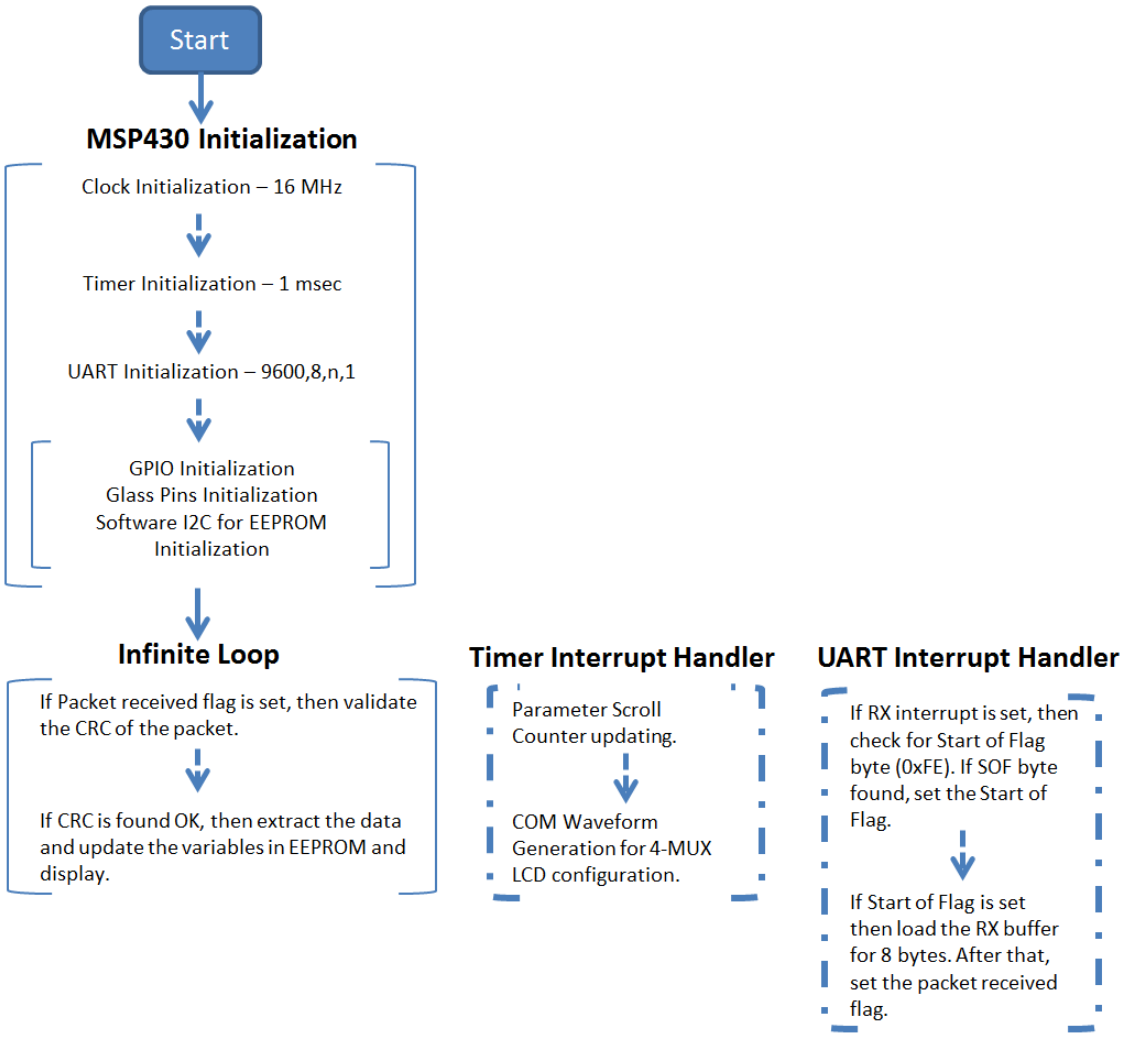

Figure 9. MSP430: Application Code Flow

Copyright © 2014, Texas Instruments Incorporated

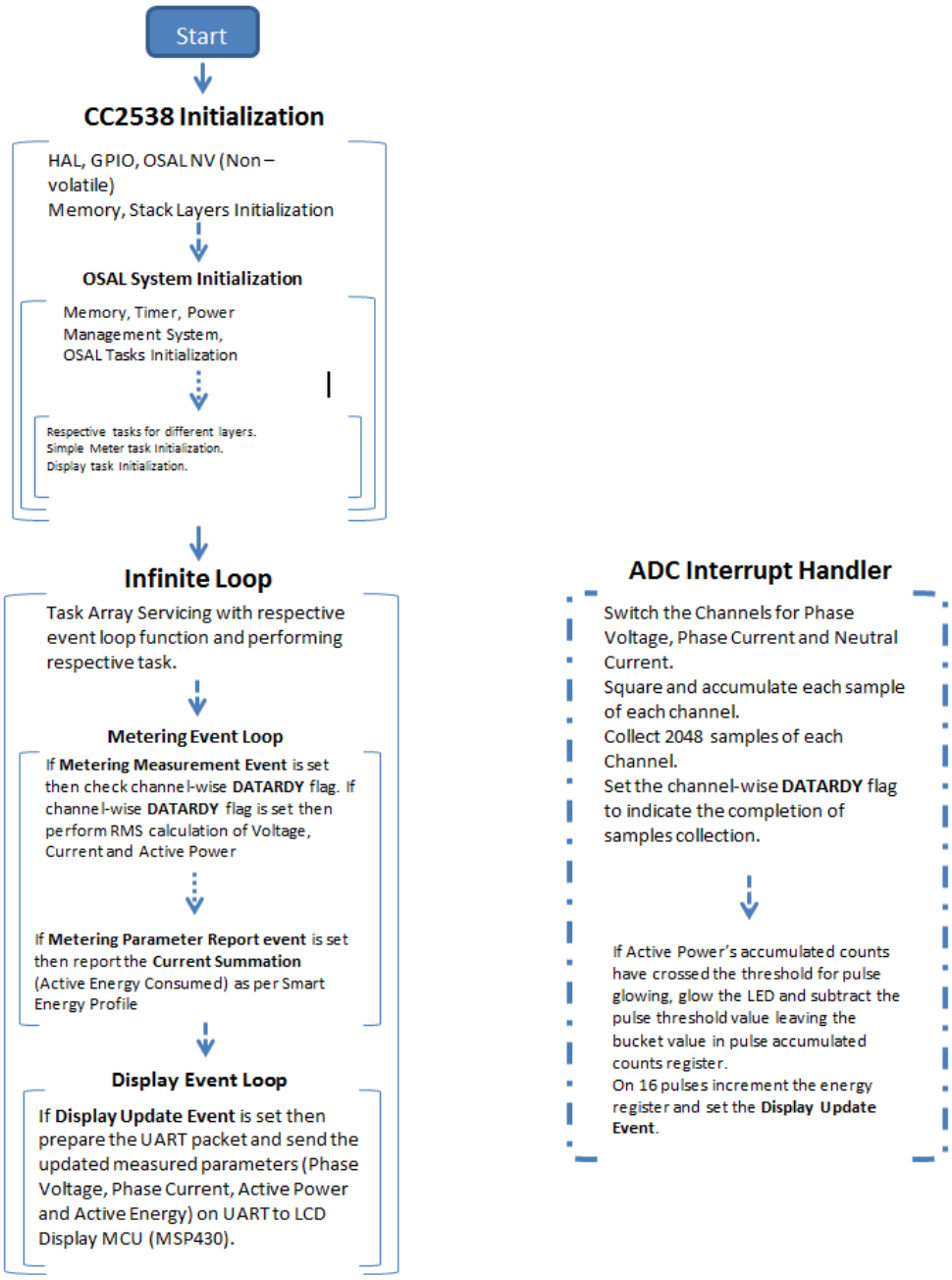

Figure 10. CC2538: Application Code Flow

Copyright © 2014, Texas Instruments Incorporated

5 Test Tools

For over-the-air communication testing and debugging, the following tools are used:

- Texas Instruments: Smart-RF Packet Sniffer: Packet Sniffer
- Ubilogix: Ubiqua Protocol Sniffer

As an example, Figure 11 is a screenshot of Ubiqua showing the data communication happening between coordinator and router. The energy meter (CC2538) acting as router gets associated with another CC2538 acting as coordinator. The router then periodically reports the cumulative active energy (cumulative kWh) as soon as there is an increment in the energy.

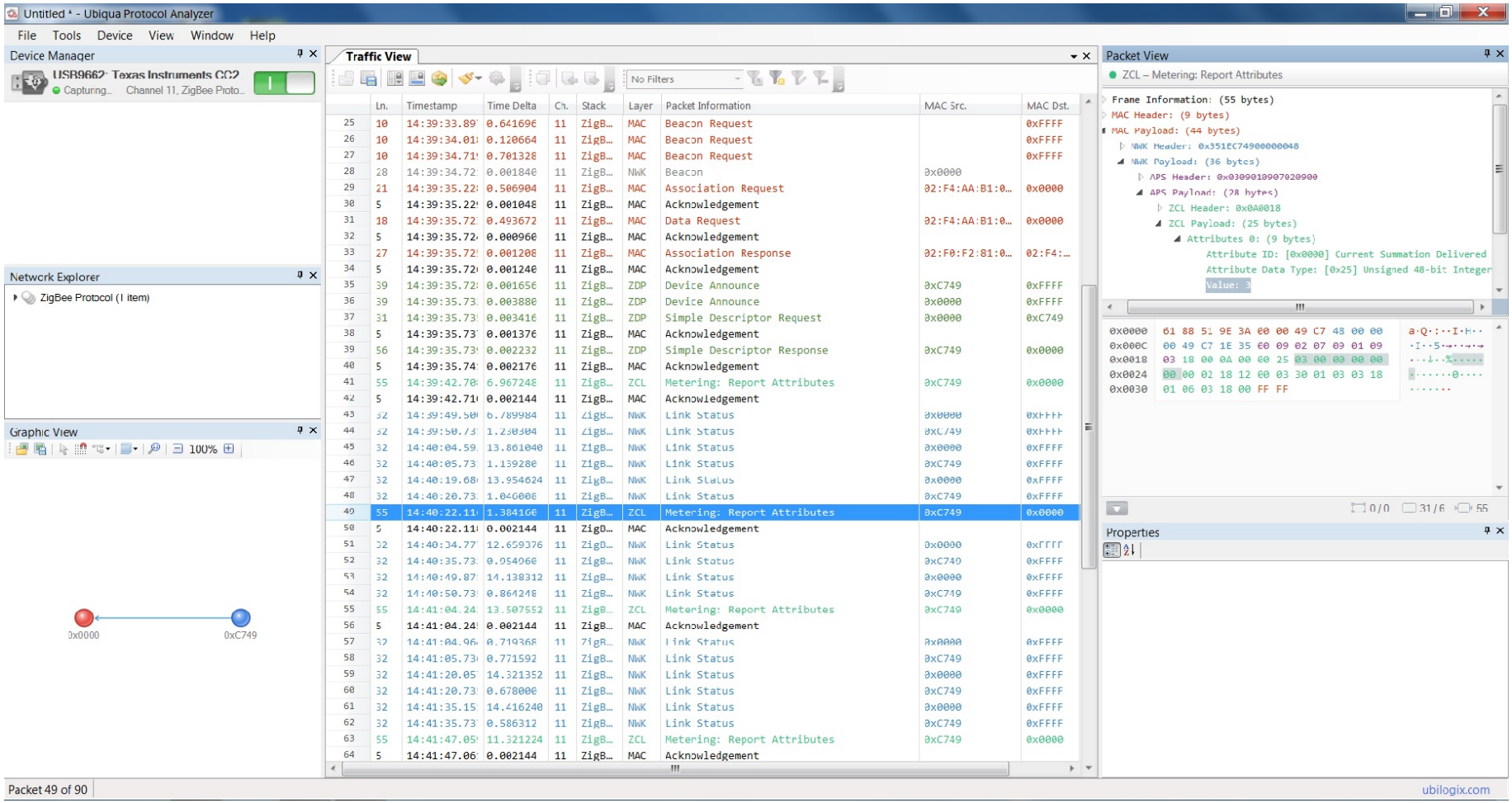

Figure 11. Ubiqua Sniffer Log: Network Association and Authentication by Meter

Copyright © 2014, Texas Instruments Incorporated

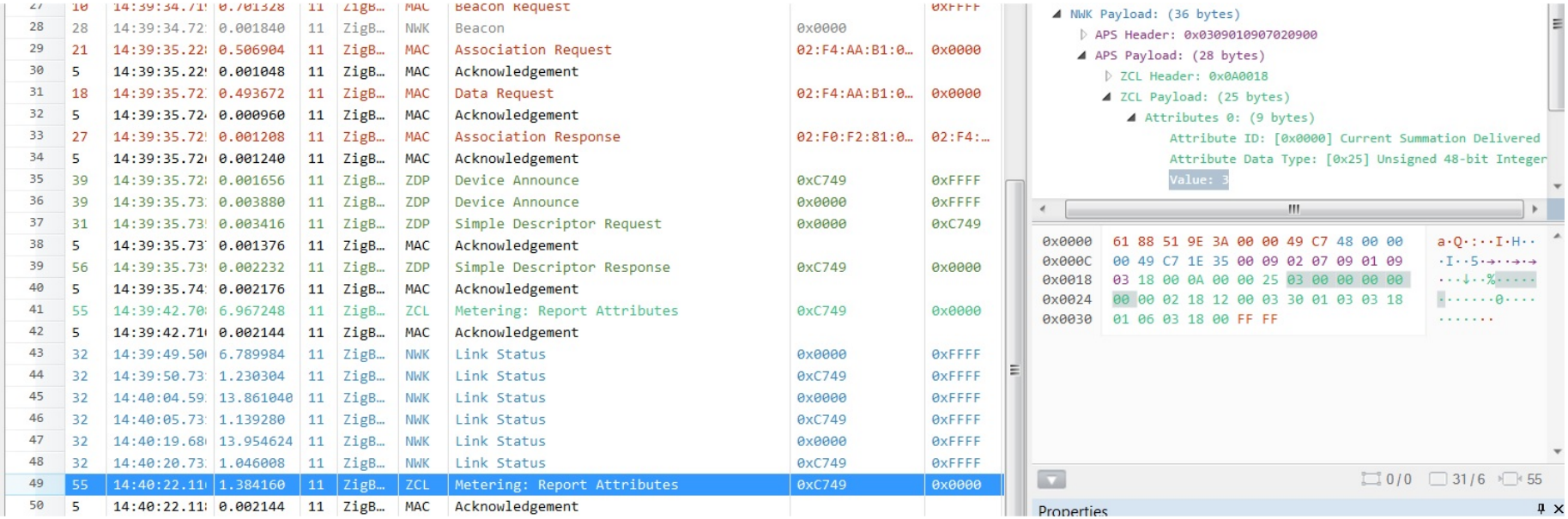

Figure 12. Ubiqua Sniffer Log: Metering Attributes Reporting by Meter

Copyright © 2014, Texas Instruments Incorporated

Appendix A

UART Packet from CC2538 to MSP430 for updating the measured values on display and memory:

SOF	Command ID	Attribute ID-1	Attribute ID-2	Length Byte	Data Bytes	CRC

SOF: Start of Flag: Start of packet indication. Its value is fixed to 0xFE.

Command ID: Indicates the type of command packet. For example 0x07 indicates the packet has data to be updated on display, and 0x08 indicates the packet has data to be updated in memory and similarly 0x09 indicates the packet has data to be updated on memory and display both.

Attribute ID-1: Indicates the type of data. For example 0x23 is for cumulative active energy, 0x24 is for phase voltage and 0x25 is for phase current

Attribute ID-2: Indicates the phase number/import or export for phase parameters and active energy, respectively

Length Byte: Indicates the size of the data payload

Data Bytes: Actual data payload

CRC: Cyclic redundancy Check for error correction and error free communication

References

1. CC2538: Third Generation System-on-Chip Solution for 2.4 GHz IEEE 802.15.4 / RF4CE / ZigBee Data Sheet (SWRS096A).
2. CC2538: User Guide (SWRU319).
3. CC2538: Peripheral User Guide (SWRU325).
4. MSP430G2955: Datasheet (SLAS800).
5. MSP430x2: User Guide (SLAU144).
6. MSP430 Value Line Launchpad Development Kit White Paper (SLAY017).
7. Ubiqua: Your toolbox for sensor networks (www.ubilogix.com).
8. Z-Stack Developer's Guide document.
9. IEEE std. 802.15.4 – 2006: Wireless Medium Access Control (MAC) and Physical Layer (PHY) specification for Low Rate Wireless Personal Area Networks (LR-WPANs) (http://standards.ieee.org/getieee802/download/802.15.4-2011.pdf).
10. ZigBee Standard Specification (https://www.ZigBee.org/Standards/Downloads.aspx).
11. Application Note: Software Glass LCD Driver Based on MSP430 MCU(SLAA516A).

Copyright © 2014, Texas Instruments Incorporated

IMPORTANT NOTICE

Texas Instruments Incorporated and its subsidiaries (TI) reserve the right to make corrections, enhancements, improvements and other changes to its semiconductor products and services per JESD46, latest issue, and to discontinue any product or service per JESD48, latest issue. Buyers should obtain the latest relevant information before placing orders and should verify that such information is current and complete. All semiconductor products (also referred to herein as “components”) are sold subject to TI’s terms and conditions of sale supplied at the time of order acknowledgment.

TI warrants performance of its components to the specifications applicable at the time of sale, in accordance with the warranty in TI’s terms and conditions of sale of semiconductor products. Testing and other quality control techniques are used to the extent TI deems necessary to support this warranty. Except where mandated by applicable law, testing of all parameters of each component is not necessarily performed.

TI assumes no liability for applications assistance or the design of Buyers’ products. Buyers are responsible for their products and applications using TI components. To minimize the risks associated with Buyers’ products and applications, Buyers should provide adequate design and operating safeguards.

TI does not warrant or represent that any license, either express or implied, is granted under any patent right, copyright, mask work right, or other intellectual property right relating to any combination, machine, or process in which TI components or services are used. Information published by TI regarding third-party products or services does not constitute a license to use such products or services or a warranty or endorsement thereof. Use of such information may require a license from a third party under the patents or other intellectual property of the third party, or a license from TI under the patents or other intellectual property of TI.

Reproduction of significant portions of TI information in TI data books or data sheets is permissible only if reproduction is without alteration and is accompanied by all associated warranties, conditions, limitations, and notices. TI is not responsible or liable for such altered documentation. Information of third parties may be subject to additional restrictions.

Resale of TI components or services with statements different from or beyond the parameters stated by TI for that component or service voids all express and any implied warranties for the associated TI component or service and is an unfair and deceptive business practice. TI is not responsible or liable for any such statements.

Buyer acknowledges and agrees that it is solely responsible for compliance with all legal, regulatory and safety-related requirements concerning its products, and any use of TI components in its applications, notwithstanding any applications-related information or support that may be provided by TI. Buyer represents and agrees that it has all the necessary expertise to create and implement safeguards which anticipate dangerous consequences of failures, monitor failures and their consequences, lessen the likelihood of failures that might cause harm and take appropriate remedial actions. Buyer will fully indemnify TI and its representatives against any damages arising out of the use of any TI components in safety-critical applications.

In some cases, TI components may be promoted specifically to facilitate safety-related applications. With such components, TI’s goal is to help enable customers to design and create their own end-product solutions that meet applicable functional safety standards and requirements. Nonetheless, such components are subject to these terms.

No TI components are authorized for use in FDA Class III (or similar life-critical medical equipment) unless authorized officers of the parties have executed a special agreement specifically governing such use.

Only those TI components which TI has specifically designated as military grade or “enhanced plastic” are designed and intended for use in military/aerospace applications or environments. Buyer acknowledges and agrees that any military or aerospace use of TI components which have ***not*** been so designated is solely at the Buyer's risk, and that Buyer is solely responsible for compliance with all legal and regulatory requirements in connection with such use.

TI has specifically designated certain components as meeting ISO/TS16949 requirements, mainly for automotive use. In any case of use of non-designated products, TI will not be responsible for any failure to meet ISO/TS16949.

Products		**Applications**	
Audio	www.ti.com/audio	Automotive and Transportation	www.ti.com/automotive
Amplifiers	amplifier.ti.com	Communications and Telecom	www.ti.com/communications
Data Converters	dataconverter.ti.com	Computers and Peripherals	www.ti.com/computers
DLP® Products	www.dlp.com	Consumer Electronics	www.ti.com/consumer-apps
DSP	dsp.ti.com	Energy and Lighting	www.ti.com/energy
Clocks and Timers	www.ti.com/clocks	Industrial	www.ti.com/industrial
Interface	interface.ti.com	Medical	www.ti.com/medical
Logic	logic.ti.com	Security	www.ti.com/security
Power Mgmt	power.ti.com	Space, Avionics and Defense	www.ti.com/space-avionics-defense
Microcontrollers	microcontroller.ti.com	Video and Imaging	www.ti.com/video
RFID	www.ti-rfid.com		
OMAP Applications Processors	www.ti.com/omap	**TI E2E Community**	e2e.ti.com
Wireless Connectivity	www.ti.com/wirelessconnectivity		

Mailing Address: Texas Instruments, Post Office Box 655303, Dallas, Texas 75265
Copyright © 2014, Texas Instruments Incorporated