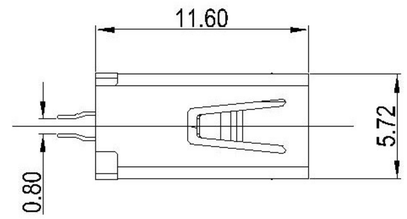

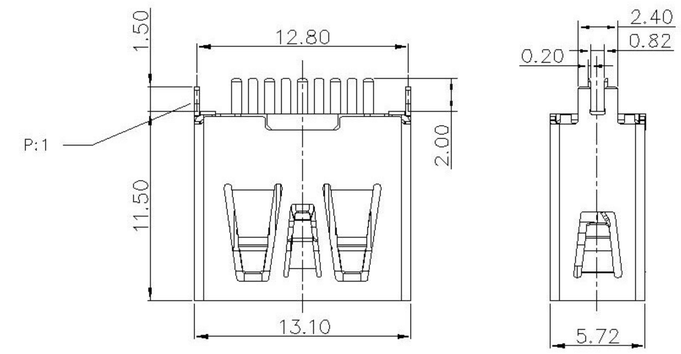

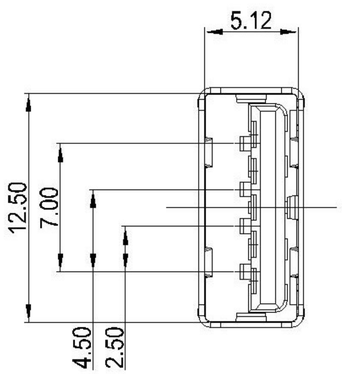

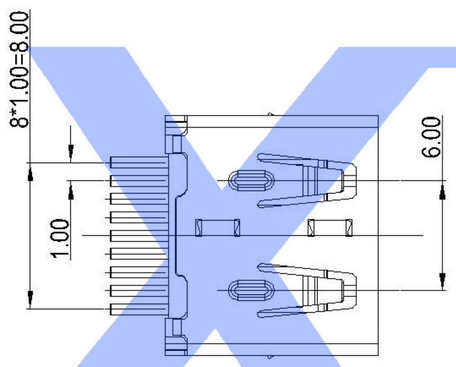

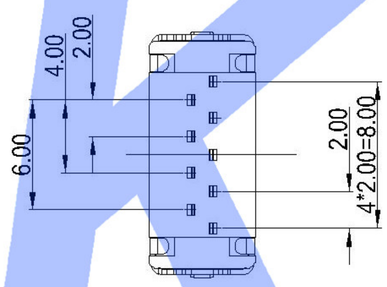

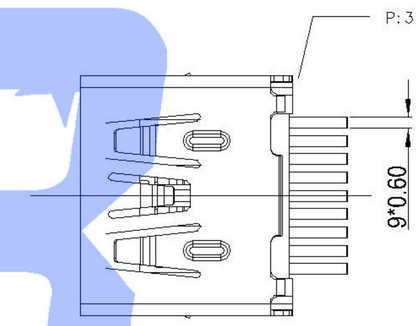

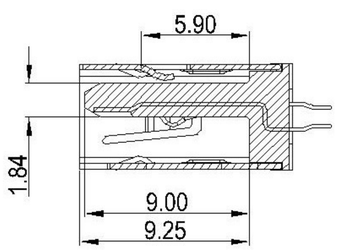

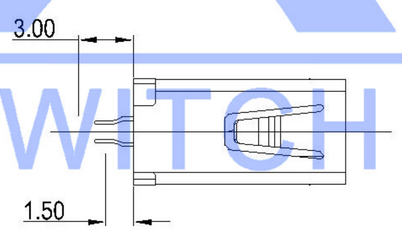

NOTES:

1. ELECTRICAL:
   1) CURRENT RATING:1.8AMP;
   2) INSULATION RESISTANCE: 100MΩ MIN;
   3) CONTACT RESISTANCE: 50mΩ MAX;
   4) WITHSTANDING VOLTAGE: 100V AC;
   5) OPERATING TEMPERATURE:-55°C ~ +85°C.
2. Mechanical:
   1) Mating Force: 35N MAX
   2) Unmating Force: 10N MIN.
3. DIMENSIONS MARKED "▼" TO BE CHECKED BY Q.C & IPQC.
4. PART NO.

U233-09XN-XBLPC17-X-1

- 1:Au 1U"
- 5:Au 15U"
- 6:Au 30U"
- T:TIN
- N:NICKEL
- B:BLACK W:WHITE BL:BLUE
- 1:PBT
- 2:PA6T
- 3:PA9T
- 4:LCP
- 1:SPCC
- 5:BRASS
- P:1 P:3

MARK	DESCRIPTION	DATE	REVISED	APPROVED
△X				
△X				
△X				

REVISIONS

ANGLAR	±5°
L≤4	±0.2
4<L≤16	±0.3
16<L≤63	±0.4
L>63	±0.5

UNSPECIFIED TOLERANCES

www.xk-dg.cn www.helloxkb.com www.helloxkb.cn

DSND		DATE		SCALE: N/A
DWN		DATE		VIEW:
CHKD		DATE		UNIT: mm
APPD		DATE		SIZE: A4

XKB INDUSTRIAL PRECISION CO.,LIMITED

MODEL TYPE: USB 3.0

PART NO.:

DWG NO.: U233-09XN-XBLPC17-X-1

WEIGHT	SHEET	REVISION
1.0g	1/1	A0

XKB SWITCH CONNECTOR