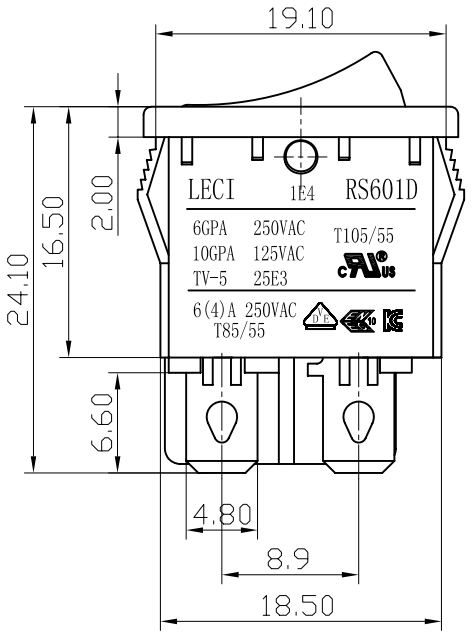

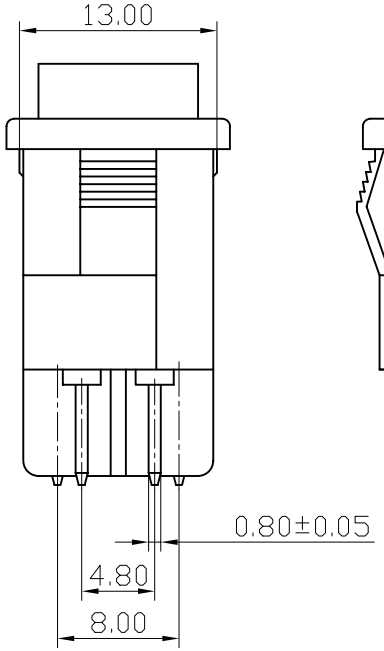

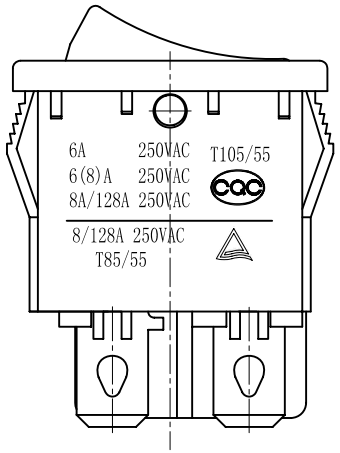

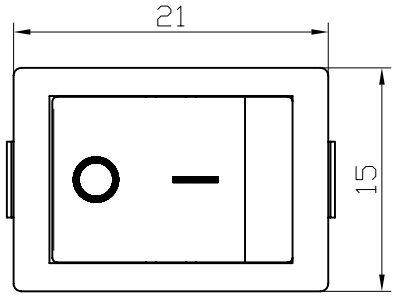

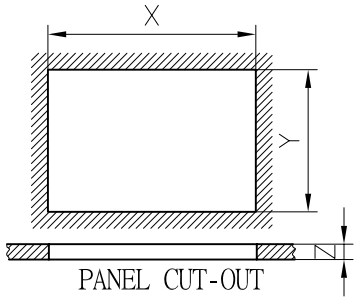

PANEL CUT-OUT		
Z	Y	X
0.70～1.25	12.90～13.10	18.9～19.1
1.25～2.00	12.90～13.10	19.1～19.2
2.00～3.00	12.90～13.10	19.3～19.4

NOTES:

1.Rating:

CQC 6A 250VAC 6(8)A 250VAC
8A/128A 250VAC T105/55

UL cUL 6GPA 250VAC
10GPA 125VAC
T105/55 TV-5

VDE ENEC 6(4)A 250VAC T85/55

KC 6(4)A 250VAC T85/55

TUV 8/128A 250VAC T85/55

2.Circuit Diagram:4P ON-OFF

3.Terminal Strength:≥80N

4.Electrical life:≥10000 cycles

5.Withstand Voltage:Withstand Voltage:1500VAC 1min
Terminals to Button:3000VAC 1min
Leakage Current:1mA

6.Current resistance:≤50mΩ(initial)

7.Insulation resistance:≥100MΩ

8.Body Materil:NYLON 66 94V-0~2

SWITCHING CIRCUIT

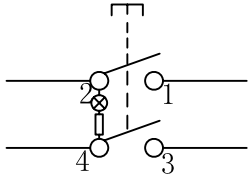

A4				普通公差: COMMON TOLERANCE :		深圳市华灿天禄电子有限公司						
A3												
A2				UP TO 5	±0.20	单位 UNIT	mm	投影 PROJECTED		品名 PRODUCT NAME	跷板开关	比例 SCALE	Free
A1				ABOVE 5 TO 30	±0.30	绘图 DRAWN BY	吴 飞	核对 CHECKED BY	梁金勇	型号 MODEL NO.	RS601D		
				ABOVE 30	±0.50								
REV.	DATE	REVISION DESCRIPTION	ISSUE	ANGULAR	±5°	日期 DATE	2015.09.08	核准 APPROVAL BY	周培雷	图号 DWG NO.	RS601D-201N006RB		