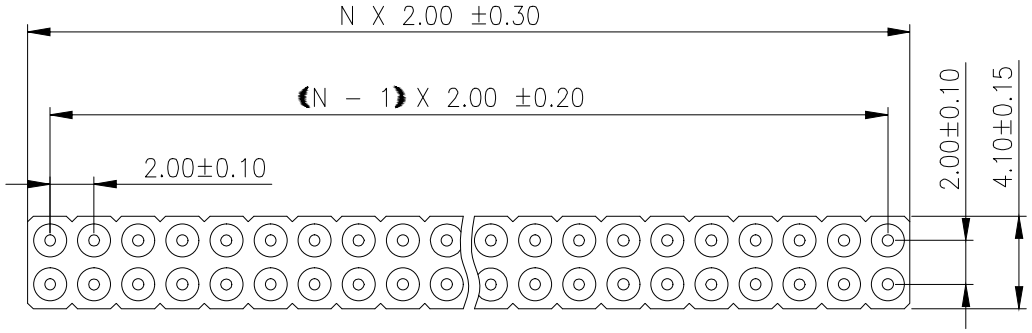

注：整条总长+0.5

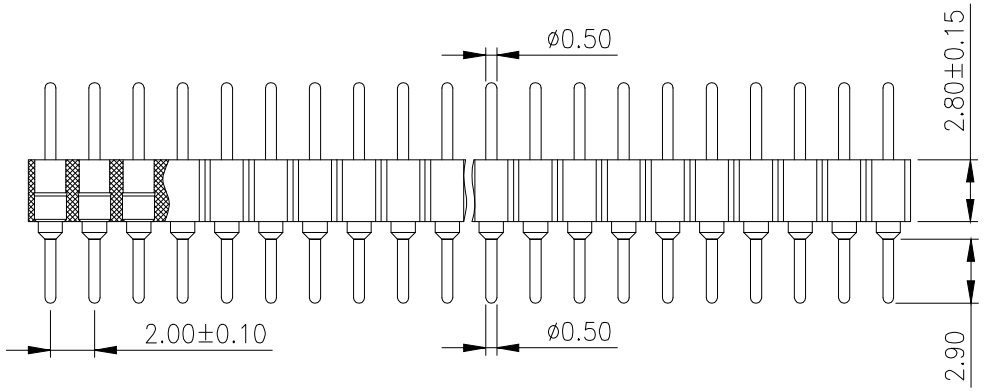

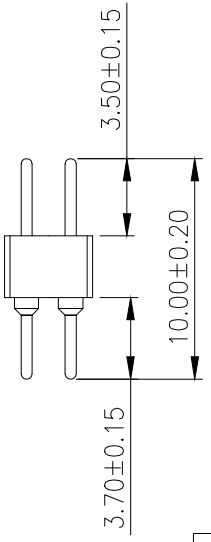

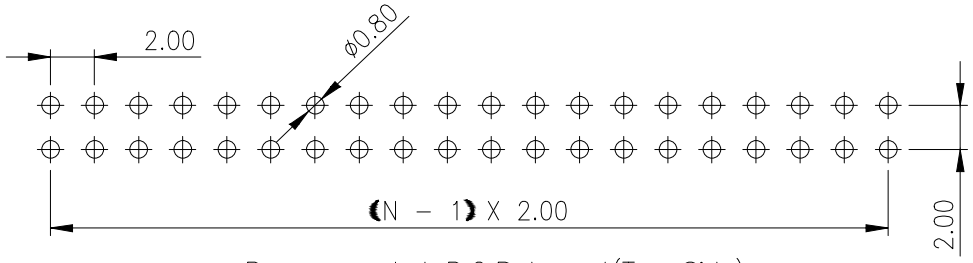

Recommended P.C.B Layout(Top Side)
(PCB BOARD TOLERANCE±0.05)

Masterials
Pin:Brass,machined, (H59-3)
Plating:Gold plated:1.25u"m/50u"nickel,full gold
Insulator body(black):PPS(UL94V-0)

Electrical
Current rating:2Amps/contact max.
Contact resistance:20mΩ
Insulation resistance:1000MΩ
Operating voltage:60 AC/DC

Mechanical
Operating temperature :Gold plated:-55℃ to +105℃
(Continuous) -67°H to +105°H
Tin plated:-40℃ to +105℃
Soldering temperature:260℃,10s max

Ordering Information

PZ 200 - * - N - Z - C

- * : No.of Rows 1=Single Row 2=Dual Row
- N : No.of Pins 2-40Pin
- C : Length 100=10.0mm

			GENERL TOLERANCE	制 图 DRAWING		深圳市华灿天禄电子有限公司 ShenzhenhuacantianluELECTRONICS CO.,LTD			
			DIM TOL	审 核 CHECK					
			X.X ±0.30	批 准 APPROVAL		产品名称 TITLE	2.0x2.8双头针180° L=10.0 (针尖0.5)	版 本 REV.	A
			X.XX ±0.20	比 例 SCALE					
1	初版发行		X.XXX ±0.10			产品料号 PART NO.	PZ200-2-N-Z-C	单 位 UNITS	mm
序号 No.	变更内容 MODIFY CONTENT	日 期 MODIFY DATE	Angle ±3.0°	投 影 Projection		材 料 MATERIAL		页 次 SHEET	1/1