KNSCHA®
全球高端电容器制造商

东莞市科尼盛电子有限公司
DONGGUAN KNSCHA ELECTRONICS CO., LTD.

规格承认书
Specification for approval

客户名称: (Customer Name)	
产品名称: (Product Name)	铝电解电容 Aluminum Electrolytic Capacito
客户料号： (Customer part number)	深圳市立创电子商务有限公司
科尼盛料号： (KNSCHA number)	01EC3470 01EC3470
型号规格: (Specifications)	KNSCHA SHC 50V220μF Φ8*12L KNSCHA SHC 50V220μF Φ8*12L

制 造 (Manufacture) Approval			客 户 (Customer) Approval		
拟 制 (Fiction)	审 核 (Chief)	核 准 (Approval)	检 验 (Inspect)	审 核 (Chief)	核 准 (Approval)
刘淑芬	工程课 刘军军	徐贵南			

东莞市科尼盛电子有限公司
DONG GUAN KNSCHA ELECTRONICS CO.,LTD.
No. The 8th Floor, A3 Building, R&D Center (Phase I),
Songshan Lake Intelligent Valley, Liaobu Town, Dongguan City.
TEL:0769-83698067 81035570 FAX: 0769-83861559
Email：sales@knscha.com Website: http://www.knscha.com

SHC Series

Aluminum Electrolytic Capacitors

Item Name	Rating	Case size	KNSCHA Lifetime
01EC3470	SHC50V220μF	Φ8*12L	2000 hours

1. Operating Temp. Range

-40℃ ～ + 105℃

2. Electrical Characteristics

【Table 1】

Rated Voltage VDC	Surge Voltage VDC	Nominal Static Capacitance (μF)	Tolerance on Capacitance(%) 20℃ 120Hz	Dissipation Factor (tan δ)max 20℃ 120Hz	Leakage Current 5min. 20℃ (μA)max	Permissible Ripple Current (mArms)max 105℃120Hz
50	63	220	-20～＋20	0.12	110	350

3. Dimensions

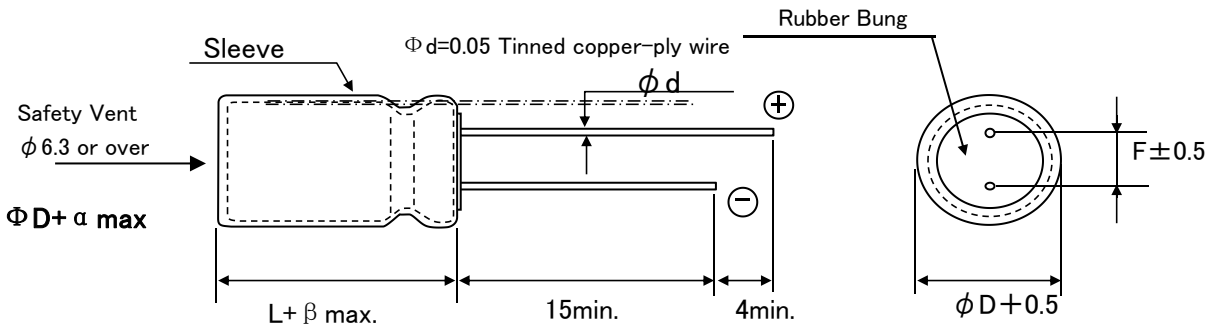

Unit(mm)

φD+0.5Max	L+1.5Max	F±0.5	d±0.05
8	12	3.5	0.5

4. Marking

Following items are printed with white color on black color sleeve

Example of Marking

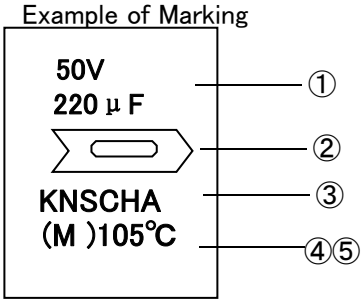

① Rated voltage & Nominal Capacitance
② Polarity (negative)
③ Trade Mark
④ Symbol of Capacitance Tolerance (M)
⑤ Max Operating Temp.

5.MULTIPLIER FOR RIPPLE CURRENT

①. Frequency Coefficient

Cap(μF) \ Freq.(Hz)	60（50）	120	300	1K	10K
0.1-47	0.75	1.00	1.35	1.55	2.00
68-680	0.80	1.00	1.25	1.34	1.50
1000-22000	0.85	1.00	1.10	1.13	1.15

②. Temperature Coefficient

Ambient Temperature(℃)	40	60	70	85	105
Coefficient	2.40	2.10	1.78	1.65	1.00

6. Characteristics

No.	Item	Performance	Test Method
1	Leakage Current	I= 110.0 μA (I=0.01CV) I= Max Leakage Current C=Ctatic Capacitor: V=Rated Voltage	Protection Resistor : 1000±10Ω Applied Volt : Rated Voltage Mesauring time : 5minutes
2	Static Capacitance	176 ～ 264 μF	Measured Frequency : 120Hz±20% Measured Voltage ≤ 0.5Vrms, 1.5 ～ 2.0VDC
3	Dissiption Factor (tanδ)	0.12 and Under	Same as condition of Capacitors
4	High Temp. Load Charac-teristics	Leakage Current: ≦the value specified in Table 1 Cap. Change: ≦±20% of initial value Dissipation Factor: ≦200% of value specified in Table Appearance: No remarkable abnormality	Test Temp. : 105±2℃ Applied voltage: Rated voltage Test Time :5,000 hours +72, −0 hours
5	High Temp. no load Charac-teristics	Leakage Current: ≦the value specified in Table 1 Cap. Change: ≦±20% of initial value Dissipation Factor: ≦200% of value specified in Table Appearance: No remarkable abnormality	Test Temp. : 105±2℃ No voltage applied Test Time :1000 hours +24, −0 hurs
6	Terminal Strength	Tensile Strength: 45N {4.5kg} Bending Strength: 25N {2.5kg}	Keeping time Tensile 1～5sec Bending 30±5sec
7	Impedance Ratio	W V: 50 Z−25℃/Z+20℃: 3 Z−40℃/Z+20℃: 10	
8	Temperature Charac − teristics	Stage 2,3: Impedance Ratio — less than the value mentioned in 5−7, Stage 5: Cap, Change — ≦±25% against value in stage 4 After the capacitor is held at tempereture of each stage and reaches temperature stability, measure performance.	Stage / Test Temp(℃): 1: 20±2 2: −25±3; 3: −25±3; 4: 20±2 5: 105±2 6: 20±2
9	Surge Voltage	Item / Performance: Leakage Current: ≤ the initial specified value Cap, Change: ≤ ±15% against value before test Dissipation Factor: ≤ the initial specified value Appearance: No remakable abnormality Test Temp. 15～35℃ Test volt. Surge Volt.Specified in 2 Voltage apply. 1,000times of chage for 30±5sec, under frequency of 6±0.5sec, and discharge for 5min30sec.	

6-2. Characteristics

No.	Item	Performance	Test Method
10	Vibration Resistance	Capacitance: Stability required Cap. Change: ≤±5% of the initial specified value Appearance: No remarkable abnormality Frequency : 10～55Hz/1min. Width of vibration, 1.5mm Direction and duration X, Y and Z directions, each for 2 hours (Total 9 hours)	
11	Solderbility	3/4 area of surrounding directions of surface should be covered with new solder.	Solder: Sn-Ag, Sn-Cu Type Soldering Temp : 240±5℃ Dipping degree : 2～2.5mm Flux : Ethanol solution (JIS K8101) or Isopropylalchol (JIS K8839) solution of Rosin (JIS K5902)
12	Resistance to Soldering	Leakage Current: ≦ Initial specified value Cap. Change: ≦±10% of initial value Dissipation Factor: ≦ Initial specified in value Appearance: No remarkable abnormality	Soldering Temp. 280±5℃ Soldering Time . 10±1sec.
13	Resistance to Humidity	Leakage Current: ≦ Initial specified value Cap. Change: ≦±15% of initial value Dissipation Factor: ≦ Initial spesified value Appearance: No remarkable abnormality	Test Temp. : 40±2℃ Humidity 90～95% Test Time : 500 ± 8 hours After the above condition,restored to normal temp, and then measured.
14	Perssure valve moment charact-erstics	There must not be thing ignition, scattering the resolution that that case works safely	Dcmethod: impress the reverse voltage and of 1A, I cancel an electric current.

7 Packing method

5-1 Packaging shape, size, quantity

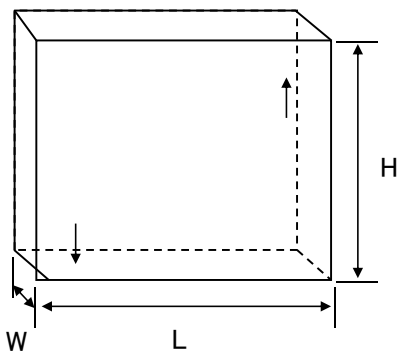

Component size	Quanity per
8*12	16000pcs.

8 Related Standards JIS C 5141

9 Marking on packing box

① Item name
② Series name
③ Rated Voltage
④ Nominal Static Capacitance
⑤ Case size
⑥ Lot No.
⑦ Quantity

10 Soldeing

8-1 Soldering by soldering iron

Temperature of iron top : 270～350℃
Operating time : within 3 sec.

8-2 Flow soldering.

Preheat : PCB surface temperature 120℃±5℃
Solder Temp : 260℃±5℃
Solder Dipping Temp. : 2～4sec.

11 Cleaning of PC boad after soldering

Using follwing solvents is possible but make sure followingcondition
Solvent
IPA or Alcoholic agent like Pinealpha ST-100S, Cleanthrough 750H, 750L, 710M, 750K, or Technocare FRW-14～17

① Cleaning should be made by ultrasonic within 5min, at the temperature less then 60℃.
② Control of pollution is necessary (conductivity,pH, specific gravity, water volume)
③ Please do not keep near cleaning agent. Please do not store in air-tight container. Please let it dry by hot air at the temperature less than maximum operating temp.

12 The situation of using

Please do not use a condenser in the next use environment.
① One circumference environment(weatherability) condition.
(a) Direct water,salt water and environment oil works or become a dew condensation state.
(b) Environment full of harmful gas (a hydrogen chloride, sulfurous acid. nitrous acid hydrochloric acid, ammonia).
(c) Ozone, infrared rays and the environment where radioactive rays are done collation of
② Vibration shock condition is extreme environment more than rule ranges of delivery specifications.

13 A country of origin

A country of origin of an SHC series alminum electrolysis condenser of specifications: China

14 Effective life for storage

Storage conditions:

① Temperature range must be between 5-35℃

② Relative humidity must be less than 75%

③ Must be stored indoor

④ Must be free from water, oil or salt water

⑤ Must be free from toxic gasses (hydrogen sulfide, sulfurous acid, chlorine, ammonium, etc.)

⑥ Must be free from ozone, ultraviolet rays or any other radiation

⑦ Must be kept in capacitor original package

Ⅰ Storage life is 12 months for capacitor of rated voltage ≤ 160V

Ⅱ Storage life is 6 months for capacitor of rated voltage ≥ 200V

Aluminum Electrolytic Capacitor
SHC Series Structure

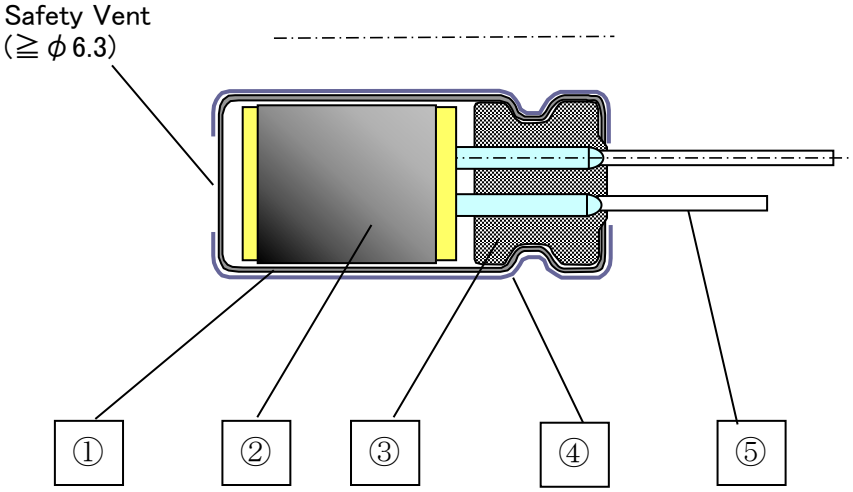

No.	Name	Material
①	Case	Aluminum
②	Element (Electrode)	High Purity Aluminum foil
	(Separator)	Manila hemp pulp
	(Electrolyte)	---
③	Rubber Bung	Synthetic Rubber
④	Sleeve	PET
⑤	Lead Wire	Tin plated Steel Wire

Controls of ozone layer destructive chemical materials

Regulated materials : CFCs, Halon, Carbon Tetrachloride, 1.1.1-Trichloroethane

The products and parts do not include the above materials

The products and parts are not used the above materials on process.

The products and parts are not used PBBOs (Poly Bromo Bi-phenyl Oxides).

All materials are mentioned as existing chemical material in the "Law of examine and control of Production of Chemical Material"

The products are not listed in Appendix 1 of Export Trade Rule and Regulation

A condenser of this series supports RoHS regulation.